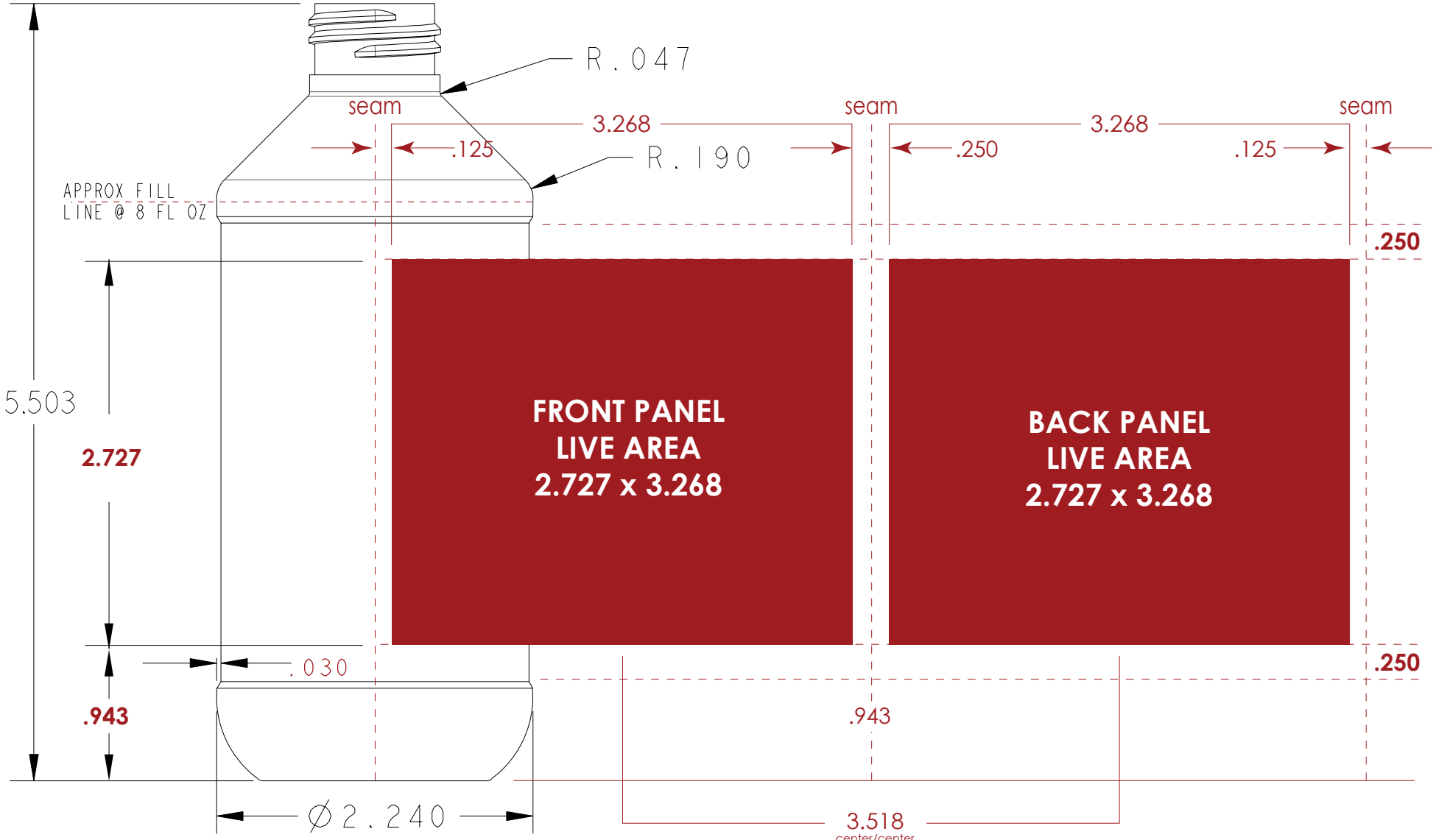

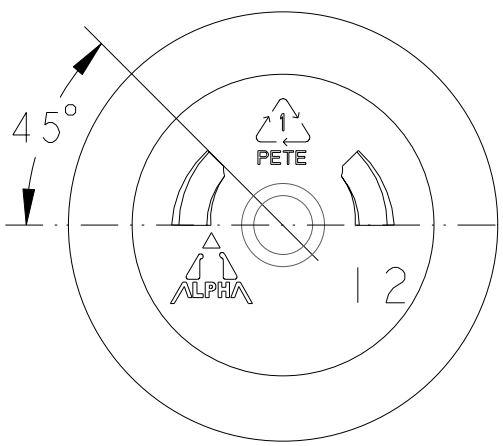

SCALE 1-1 Actual Size Technigraph CORPORATION

APPROVED:

DATE: 02/15/10

The ART & TECHNOLOGY of PACKAGE DECORATION

PHONE 507-454-3830 FAX 507-454-6470

TECHNIGRAPH STOCK NUMBER: Estimated decorating template

This preliminary decorating template is for the bottle defined per
• **Alpha drawing number 8MRIMN24M410** •
For specific bottle details please refer to the latest engineer drawing/revision for this container.

ALPHA PACKAGING

ALPHA Packaging, Inc
(314) 427-4300 - (800) 421-4772

Scale:	Drawn By: SCT	Date: 05-05-00

8oz MODERN ROUND, PET, 24-410 8MR24410PET

DwgRev: A

Approved By: SJ

Drawing NO: 8MRIMN24M410